PARTS CATALOG

KM376

KIPOR

ENERGEN
11-6000-9893
ventas@energen.com.ar

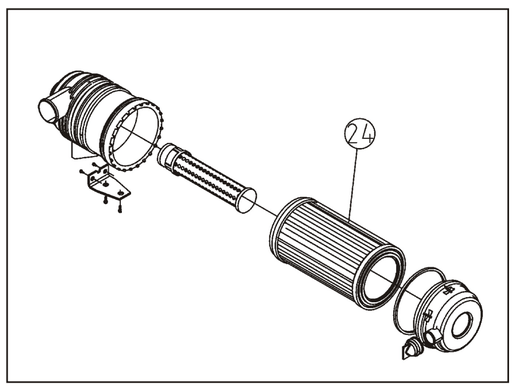

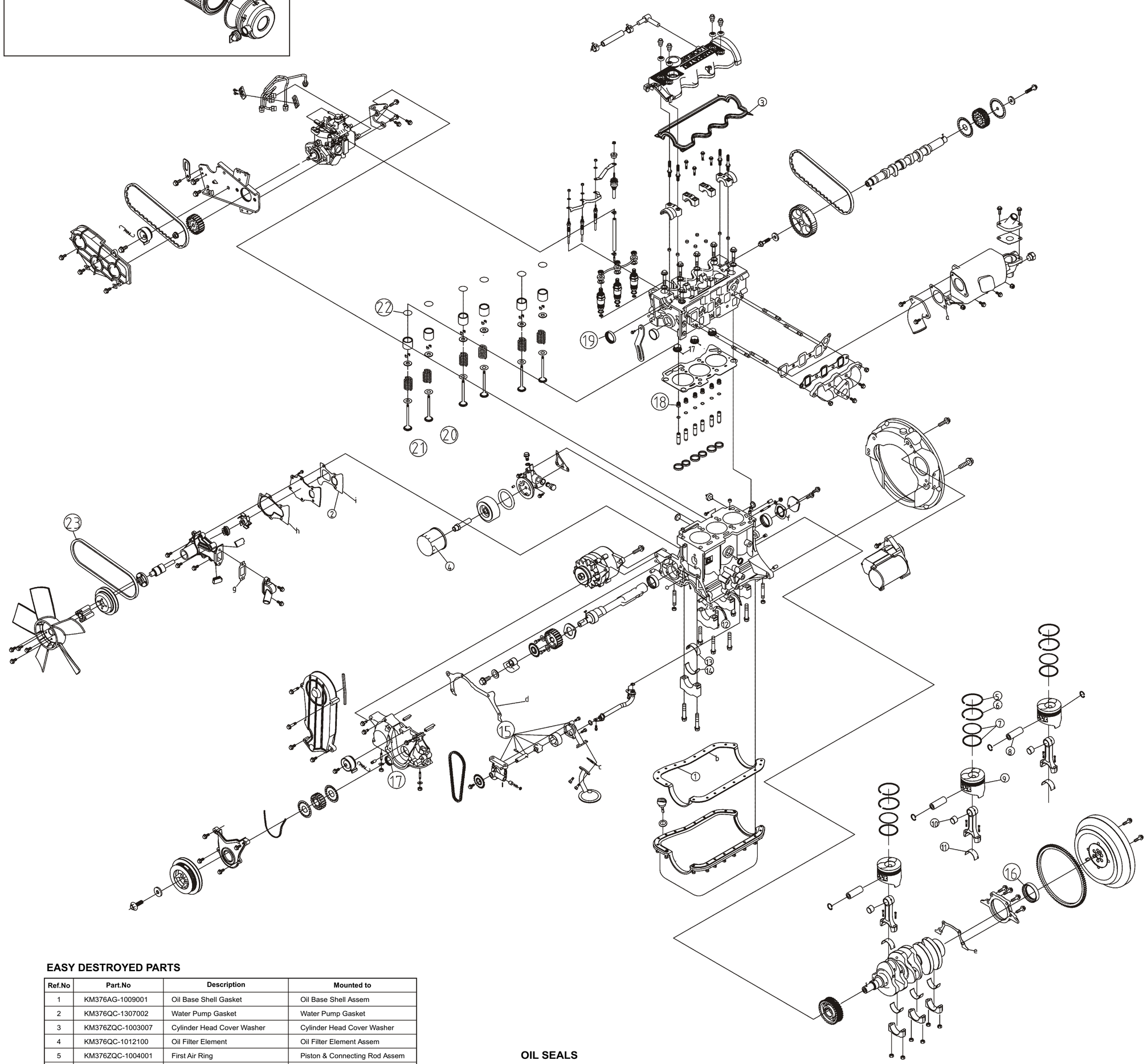

EASY DESTROYED PARTS

Ref.No	Part.No	Description	Mounted to
1	KM376AG-1009001	Oil Base Shell Gasket	Oil Base Shell Assem
2	KM376QC-1307002	Water Pump Gasket	Water Pump Gasket
3	KM376ZQC-1003007	Cylinder Head Cover Washer	Cylinder Head Cover Washer
4	KM376QC-1012100	Oil Filter Element	Oil Filter Element Assem
5	KM376ZQC-1004001	First Air Ring	Piston & Connecting Rod Assem
6	KM376ZQC-1004002	Second Air Ring	Piston & Connecting Rod Assem
7	KM376ZQC-1004200	Oil-ring	Piston & Connecting Rod Assem
8	KM376ZQC-1004004	Piston pig	Piston & Connecting Rod Assem
9	KM376A-1004005	Piston	Piston & Connecting Rod Assem
10	KM376ZQC-1004100	Connecting Rod Bush	Piston & Connecting Rod Assem
11	KM376ZQC-1004006	Connecting Rod Bearing	Piston & Connecting Rod Assem
12	KM376ZQC-1002022	Crankcase Pushing Slice	Housing Assem
13	KM376ZQC-1002023	Crankcase Up Main Bearing	Housing Assem
14	KM376ZQC-1002024	Crankcase Bottom Main Bearing	Housing Assem
15	KM376ZQC-1011100	Rotator Oil Pump Assembly	Oil Pump Assem
16	KM376ZQC-1002012	Crankcase Rear Oil Seal	Housing Assem
17	KM376QC-1002407	Crankcase Front Oil Seal	Housing Assem
18	KM376QC-1003500	Cylinder Head Parts	Valve Assem
19	KM376QC-1003001	T-style Oil seal	Cylinder Head Assem
20	KM376QC-1007001	Vent	Valve Assem
21	KM376QC-1007002	Air Intake	Valve Assem
22	KM376QC-1007008	Valve Clearance Adjusting Gasket	Valve Assem
23	KM376QC-1307006	V-belt	Water Pump Assem
24	KM376AG-1109300	Air Cleaner Element	Air Cleaner Element

OIL SEALS

Ref.No	Part.No	Description	Qty.
16	KM376ZQC-1002012	Crankcase Rear Oil Seal	1
17	KM376QC-1002407	Crankcase Front Oil Seal	1
18	KM376QC-1003500	Valve Oil Seal Assembly	6
19	KM376QC-1003001	T-style Oil Seal	2

WASHERS

Ref.No	Part.No	Description	Qty.
a	KM376XQC-1008015	Air Intake Flange Gasket	1
b	KM376AG-1009001	Oil base Frame Gasket	1
c	KM376QC-1010001	Oil Catcher Gasket	1
d	KM376QC-1002001	Gear Cover Gasket	1
e	KM376ZQC-1002009	Crankcase Rear Oil Seal Gasket	1
f	KM376QC-1002021	Balanced Axle Rear Cover Gasket	1
g	KM376ZG-1307011	Water Intake Base Gasket	1
h	KM376QC-1307003	Water Pump Body Gasket	1
i	KM376QC-1307002	Water Pump Gasket	1

FASTENING TOPQUE OF MAIN BOLT&NUT (Unit：N・m)

Description	Qty.
Cylinder Head Cover Bolt	90 ± 10
Crankcase Bolt	16 ± 1
Main Axle Bolt	60 ± 5
Oil Base Housing Bolt	5.5 ± 1.5
Connecting Rob Bolt	47 ± 5
Flywheel Bolt Spiral	55 ± 5
Oil Injection Bolt	60 ± 10
Electro-heat Plug	12 ± 2
Common Bolt and Nut M6	7.5 ± 1.5
Common Bolt and Nut M8	18.5 ± 3.5
Common Bolt and Nut M10	37.5 ± 7.5
Common Bolt and Nut M12	60 ± 10

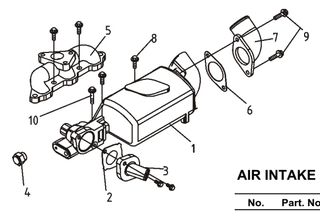

AIR INTAKE OUTLET PIPE ASSEMBLY(KM376AG-1008000)

No.	Part. No	Description	Qty.
1	KM376QC-1008009a	Air Intake Pipe	1
2	KM376ZG-1008011	Water Outlet	1
3	KM376QC-1008008	Water Outlet Gasket	1
4	KM376QC-1008006	Radiator Fan Controlling Temperature Switch	1
5	KM376ZQC-1008017	Exhaust Pipe	1
6	KM376XQC-1008015	Air Intake Flange Gasket	1
7	KM376AG-1008016	Air Intake Angle Pipe Contact	1
8	GB/T9074.15-1988	Bolt Assem.M10×1.25×30	4
9	GB/T9074.15-1988	Bolt Assem.M8×25	4
10	GB/T9074.15-1988	Bolt Assem.M10×1.25×70	1

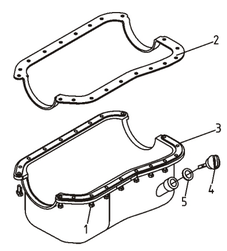

OIL BOTTOM HOUSING ASSEMBLY (KG376ZG-1009000)

No.	Part. No	Description	Qty.
1	GB9074.15-88	Bolt Assem.M6×16	14
2	KM376AG-1009001	Oil Bottom Housing Gasket	1
3	KM376AG-1009100	Oil	1
4	KM376AG-1009002	Oil Gauge	1
5	GB9T1235-1976	O-style Seal 24×2.4	1

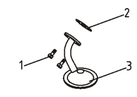

OIL CATCHER ASSEMBLY (KG376QC-1010000)

No.	Part. No	Description	Qty.
1	GB9074.15-88	Bolt Assem.M6×14	2
2	KM376QC-1010001	Oil Catcher Gasket	1
3	KM376QC-1010100	Oil Catcher	1

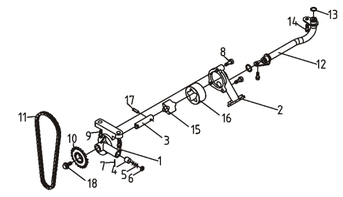

OIL PUMP ASSEMBLY (KM376ZQC-1011000)

No.	Part. No	Description	Qty.
1	KM376ZQC-1011101	Oil Pump Body	1
2	KM376QC-1011102	Oil Pump Cover	1
3	KM376QC-1011111	Oil Pump Axle	1
4	KM376QC-1011103	Oil Pump Reductor Valve	1
5	KM376QC-1011104	Reductor Spring	2
6	KM376QC-1011105	Reductor Spring Base	1
7	GB91-86	Cotter Pin	1
8	GB9074.15-88	Bolt Assembly	3
9	GB9074.15-88	Bolt Assembly.	2
10	KM376QC-1011001	Oil Pump Sprocket	1
11	KM376QC-1011200	Oil Pump Rotary Sprocket Assembly	1
12	KM376QC-1011410	Oil Outlet Pipe Welding Assembly	1
13	GB3452.1-92	O-ring	1
14	GB9074.15-88	Bolt Assembly	2
15	KM376QC-1011112	Oil Pipe Inner Rotator	1
16	KM376QC-1011113	Oil Pipe Outer Rotator	1
17	KM376QC-1011114	Oil Pipe Rotator Driving Pin	1
18	GB9074.17-88	Bolt Assembly	1

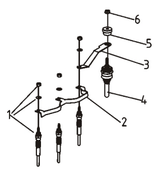

ELECTRO-HEAT PLUG ASSEMBLY (KM376QC-3770000)

No.	Part. No	Description	Qty.
1	KM376QC-3770100	Electro-heat Plug Assembly	3
2	KM376QC-3770001	Elector-heat	1
3	KM376QC-3770002	Elector Connecting	1
4	KM376QC-3770200	Resistance Current-limiter Assembly	1
5	KM376QC-3770003	Resistance Current-limiter Insulation	1
6	KM376QC-3770004	Hexagon Nut	1

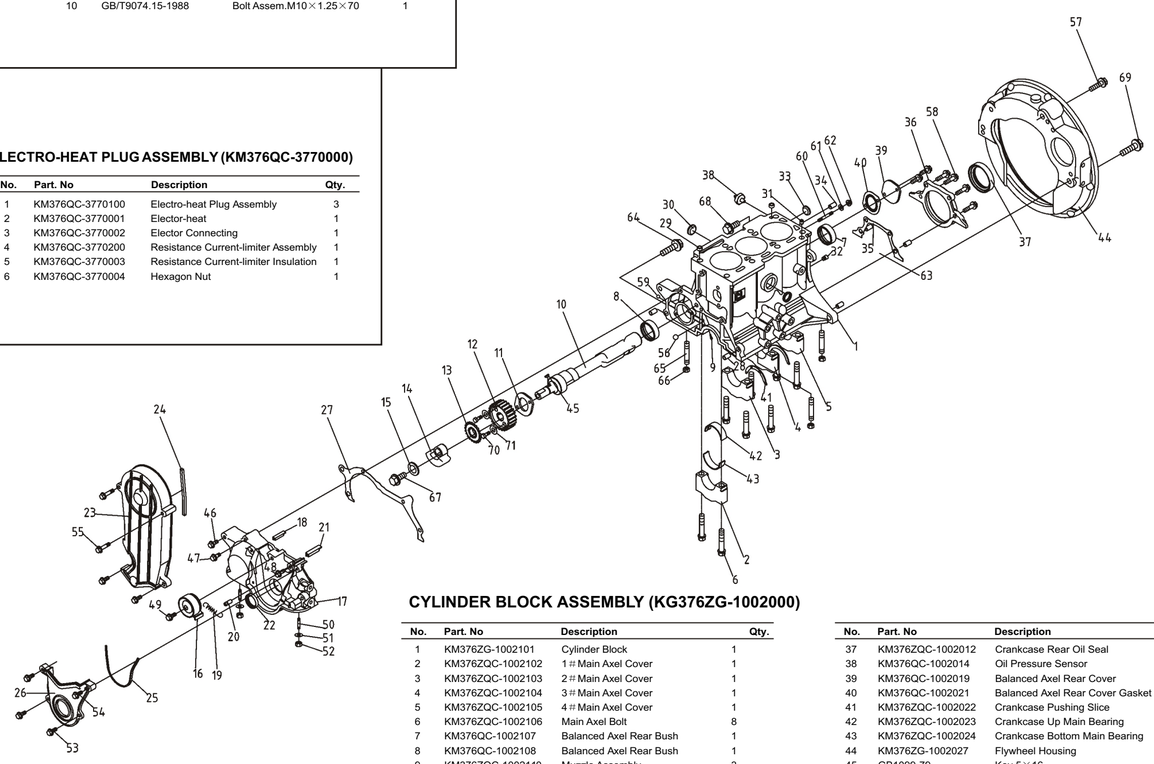

CYLINDER BLOCK ASSEMBLY (KG376ZG-1002000)

No.	Part. No	Description	Qty.
1	KM376ZG-1002101	Cylinder Block	1
2	KM376ZQC-1002102	1# Main Axel Cover	1
3	KM376ZQC-1002103	2# Main Axel Cover	1
4	KM376ZQC-1002104	3# Main Axel Cover	1
5	KM376ZQC-1002105	4# Main Axel Cover	1
6	KM376ZQC-1002106	Main Axel Bolt	8
7	KM376QC-1002107	Balanced Axel Rear Bush	1
8	KM376QC-1002108	Balanced Axel Rear Bush	1
9	KM376ZQC-1002110	Muzzle Assembly	3
10	KM376QC-1002301	Balanced Axle	1
11	KM376QC-1002302	Balanced Axle	1
12	KM376QC-1002303	Balanced Axle Gear	1
13	KM376QC-1002304	Oil Pump Driving Sprochet	1
14	KM376QC-1002305	Balanced Block	1
15	KM376QC-1002306	Balanced Axle Bolt Gasket	1
16	KM376QC-1002410	Timing Gear Tension Assembly	1
17	KM376XQC-1002401	Axle Housing Cover	1
18	KM376ZQC-1002402	Dustproof Sheet	1
19	KM376QC-1002403	Tension Pulley Spring	1
20	KM376QC-1002404	Spring Location Pin	1
21	KM376QC-1002405	Dustproof Sheet	1
22	KM376QC-1002407	Axle Front Oil Seal	1
23	KM376ZQC-1002501	Timing Gear Up Cover	1
24	KM376QC-1002502	Dustproof Nesting	1
25	KM376QC-1002503	Dustproof Nesting	1
26	KM376QC-1002504	Timing Gear Bottom Cover	1
27	KM376QC-1002001	Gear Housing Cover Gasket	1
28	KM376QC-1002002	Location Pin	4
29	KM376QC-1002003	Location pin	2
30	KM376QC-1002004	Bowl Screw 30	2
31	KM376AG-1002005	Oil Current-limit	1
32	KM376QC-1002006	Cone Plug Screw R1/4	1
33	KM376QC-1002007	Bowl Screw 25	1
34	KM376QC-1002008	Location Pin	2
35	KM376ZQC-1002009	Crankcase Rear Oil Seal Gasket	1
36	KM376ZQC-1002011	Crankcase Rear Oil Seal Gasket	1
37	KM376ZQC-1002012	Crankcase Rear Oil Seal	1
38	KM376QC-1002014	Oil Pressure Sensor	1
39	KM376QC-1002019	Balanced Axel Rear Cover	1
40	KM376QC-1002021	Balanced Axel Rear Cover Gasket	1
41	KM376ZQC-1002022	Crankcase Pushing Slice	2
42	KM376ZQC-1002023	Crankcase Up Main Bearing	4
43	KM376ZQC-1002024	Crankcase Bottom Main Bearing	4
44	KM376ZG-1002027	Flywheel Housing	1
45	GB1099-79	Key 5×16	1
46	GB9074.17-88	Bolt Assembly M10×1.25×35	1
47	GB9074.17-88	Bolt AssemblyM8×50	3
48	GB9074.17-88	Bolt Assembly M8×35	2
49	GB9074.17-88	Bolt Assembly M10×1.25×50	1
50	GB898-88	Screw Rob AM6×16	2
51	GB859-87	Gasket 6	2
52	GB6170-86	Nut M6	2
53	GB9074.17-88	Bolt Assembly M6×16	2
54	GB9074.17-88	Bolt Assembly M6×25	2
55	GB9074.17-88	Bolt Assembly M6×45	2
56	GB308-88	Steel ball 5/16in	1
57	GB9074.17-88	Bolt Assembly M10×1.25×30	1
58	GB9074.17-88	Bolt Assembly M8×25	4
59	GB308-88	Steel Ball 1/4in	2
60	GB898--88	Screw Rob AM2×1.25 28	1
61	GB93-87	Gasket 12	1
62	GB6170-86	Nut M12×1.25	1
63	GB9074.15-88	Bolt Assembly M8×16	2
64	GB9074.15-88	Bolt Assembly M10×1.25×60	1
65	GB898--88	Bolt AM6×16	4
66	GB6186-88	Locking Tight Nut M6	4
67	GB5787-86	Bolt M10×1.25×20	1
68	GB9074.15-88	Bolt Assembly M10×1.25×20	1
69	GB9074.15-88	Bolt Assembly M10×1.25×20	2
70	GB70-85	Screw M6×14	2
71	GB859-87	Gasket 6	2

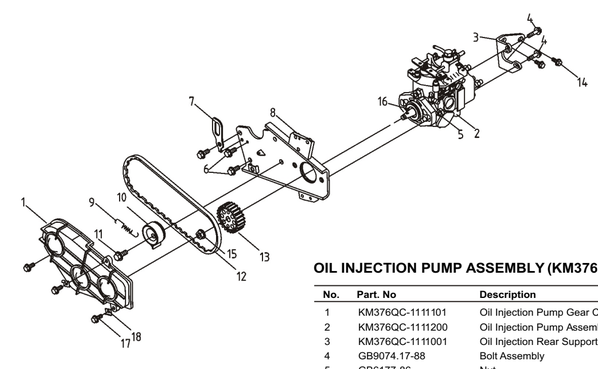

OIL INJECTION PUMP ASSEMBLY (KM376QC-1111000)

No.	Part. No	Description	Qty.
1	KM376QC-1111101	Oil Injection Pump Gear Cover	1
2	KM376QC-1111200	Oil Injection Pump Assembly	1
3	KM376QC-1111001	Oil Injection Rear Supporting Plate	1
4	GB9074.17-88	Bolt Assembly	2
5	GB6177-86	Nut	2
6	GB9074.15-88	Bolt Assembly	2
7	KM376QC-1111002	Lift Hook	1
8	KM376QC-1111300	Oil Injection Supporting Plate	1
9	KM376QC-1111003	Tension Spring	1
10	KM376QC-1111400	Timing Gear Tension Assembly	1
11	GB9074.17-88	Bolt Assembly	1
12	KM376QC-1111004	Oil Injection Pump Timing Gear	1
13	KM376QC-1111005	Oil Injection Wheel	1
14	GB9074.15-88	Bolt Assembly	3
15	GB6177-86	Nut	1
16	GB1099-79	Key	1
17	GB9074.17-88	Bolt Assembly	3
18	KM376QC-1111103	Clip	2

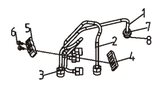

HIGH-PRESSURE OIL PIPE ASSEMBLY (KM376QC-1129000)

No.	Part. No	Description	Qty.
1	KM376QC-1129100	High Pressure Oil Pipe Assembly	1
2	KM376QC-1129200	High Pressure Oil Pipe Assembly	1
3	KM376QC-1129300	High Pressure Oil Pipe Assembly	1
4	KM376QC-1129001	High Pressure Oil Pipe Clip	1
5	KM376QC-1129002	High Pressure Oil Pipe Clip	1
6	GB9074.15-88	Bolt Assembly	2
7	KM376QC-1129003	Protecting Sheath	6
8	KM376QC-1129004	Pipe Nut	6

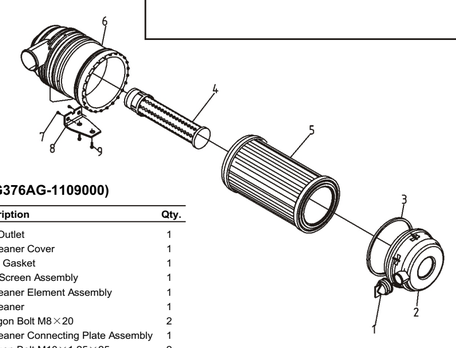

AIR FILTER ASSEMBLY (KG376AG-1109000)

No.	Part. No	Description	Qty.
1	KM376AG-1109001	Dust Outlet	1
2	KM376AG-1109002	Air Cleaner Cover	1
3	KM376AG-1109003	Sheet Gasket	1
4	KM376AG-1109200	Filter Screen Assembly	1
5	KM376AG-1109300	Air Cleaner Element Assembly	1
6	KM376AG-1109004	Air Cleaner	1
7	GB/T9074.17-1988	Hexagon Bolt M8×20	2
8	KM376AG-1109100	Air Cleaner Connecting Plate Assembly	1
9	GB/T9074.17-1988	Hexagon Bolt M10×1.25×25	2
10	KM376AG-1109400	Lap-jointed Assembly	2

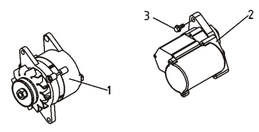

GENERATOR ASSEMBLY (KM376A-3701000)
ENGINE ASSEMBLY (KM376ZG-3708000)

No.	Part. No	Description	Qty.
1	KM376A-3701000	Generator Assembly	1
2	KM376ZG-3708000	Engine Assembly	1
3	GB9074.15-88	Bolt Assembly M10×1.25×30	2

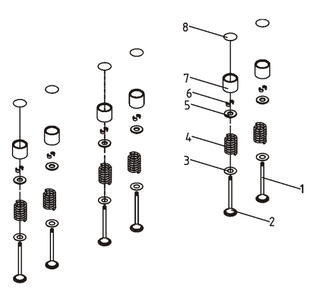

VALVE ASSEMBLY (KM376QC-1007000)

No.	Part. No	Description	Qty.
1	KM376QC-1007001	Vent	3
2	KM376QC-1007002	Vent	3
3	KM376QC-1007003	Valve Spring Base Seat	6
4	KM376QC-1007004	Valve Spring	6
5	KM376QC-1007005	Valve Spring Up Seat	6
6	KM376QC-1007006	Valve Lock Nip	12
7	KM376QC-1007007	Valve Post	6
8	KM376QC-1007008	Valve Clearance Adjusting Gasket	6

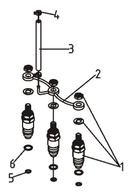

OIL INJECTION CONNECTOR (KM376QC-1112000)

No.	Part. No	Description	Qty.
1	KM376QC-1112100	Oil Injection Assembly	3
2	KM376QC-1112200	Back Oil Pipe Welding Assembly	1
3	KM376QC-1112001	Soft Pipe	1
4	KM376QC-1112002	Pipe Nip	2
5	KM376QC-1112003	Oil Injection Gasket	3
6	KM376QC-1112004	Heat Insulation Gasket	3

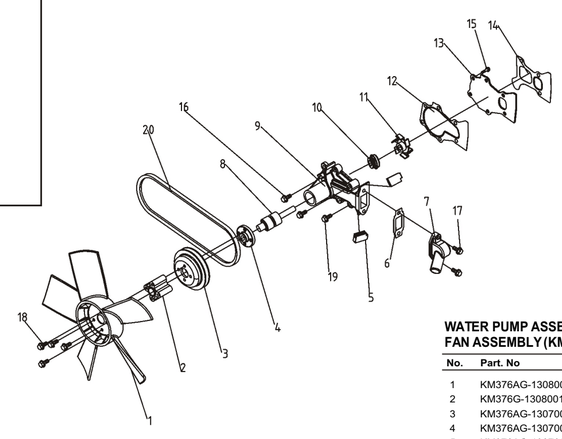

WATER PUMP ASSEMBLY (KM376ZG-1307000)
FAN ASSEMBLY (KM376ZG-1308000)

No.	Part. No	Description	Qty.
1	KM376AG-1308000A	Fan Assembly	1
2	KM376G-1308001a	Fan Cushion Block	1
3	KM376AG-1307008	Water Pump Pulley	1
4	KM376AG-1307007	Water Pump Pulley Base	1
5	KM376AG-1307004	Dustproof Gasket	2
6	KM376AG-1307011	Intake Pipe Base Shim	1
7	KM376AG-1307005	Intake Pipe Base	1
8	16140-9000	Axle receptacle	1
9	KM376ZG-1307009	Water Pump Body	1
10	KM376QC-1307200	Water Pump Gasket	1
11	KM376ZG-1307100	Assembly	1
12	KM376QC-1307003	Water Pimp Gasket	1
13	KM376QC-1307001	Water Pump Cover	1
14	KM376QC-1307002	Water Pump Gasket	1
15	GB/T9074.15-1988	Bolt Assembly M8×16	3
16	GB/T9074.15-1988	Bolt Assembly M8×30	1
17	GB/T9074.15-1988	Bolt Assembly M8×25	2
18	GB/T9074.15-1988	Bolt Assembly M8×55	4
19	GB/T9074.15-1988	Bolt Assembly M8×40	2
20	KM376QC-1307006	V-belt	1

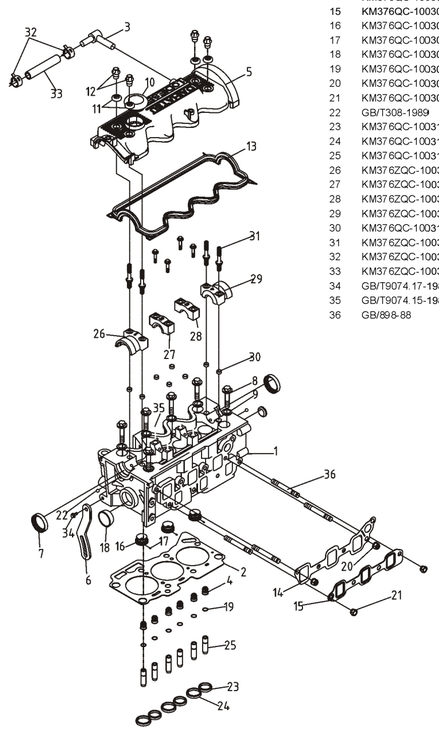

CYLINDER HEAD ASSEMBLY (KG376ZQC-1003000)

No.	Part. No	Description	Qty.
1	KM376ZQC-1003101	Cylinder Head Cover	1
2	KM376QC-1003200	Cylinder Head Cover Gasket	1
3	KM376ZQC-1003410	Breather Tie-in	1
4	KM376QC-1003500	Valve Oil Seal Cover Assembly	6
5	KM376AG-1003600	Cylinder Head Cover Assembly	1
6	KM376AG-1003300	Generator Adjusting Arm	1
7	KM376QC-1003001	T-style Oil Seal	2
8	KM376ZQC-1003002	Cylinder Head Cover Bolt	8
9	KM376QC-1003003	Cylinder Head Cover Bolt Gasket	8
10	KM376ZQC-1003004	Oil-filler Cap	1
11	KM376QC-1003005	Sheet Gasket	4
12	KM376QC-1003006	Cylinder Head Cover Bolt	4
13	KM376ZQC-1003007	Cylinder Head Cover	1
14	KM376QC-1003008	Intake Pipe Shim	1
15	KM376QC-1003009	Exhaust Pipe Shim	1
16	KM376QC-1003011A	Combustion Chamber Inlay Block	3
17	KM376QC-1003012	Inlay Location Pin	3
18	KM376QC-1003013	Delivery Head	2
19	KM376QC-1003014	Spring Clip	6
20	KM376QC-1003015	Bolt	2
21	KM376QC-1003016	Bolt	2
22	GB/T308-1989	Steel Ball 8.73123	2
23	KM376QC-1003102	Vent Base	3
24	KM376QC-1003103	Air In-take Base	3
25	KM376QC-1003104	Valve Leading Pipe	6
26	KM376ZQC-1003105	Crank Case 1#Bearing Cover	1
27	KM376ZQC-1003106	Crank Case 2#Bearing Cover	1
28	KM376ZQC-1003107	Crank Case 3#Bearing Cover	1
29	KM376ZQC-1003108	Crank Case 4#Bearing Cover	1
30	KM376QC-1003109	Holding Case	8
31	KM376ZQC-1003111	Double-Headed Bolt	4
32	KM376ZQC-1003402	Clip	2
33	KM376ZQC-1003401	Connecting Soft Pipe	1
34	GB/T9074.17-1988	Bolt Assembly M8×25	1
35	GB/T9074.15-1988	Bolt Assembly M8×45	4
36	GB/898-88	Double-headed Bolt Assembly M10×1.25×25	4

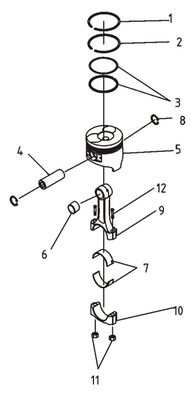

PISTON CONNECTING ROD ASSEMBLY (KM376A-1004000)

No.	Part. No	Description	Qty.
1	KM376QC-1004001	First Air Ring	3
2	KM376QC-1004002	Second Air Ring	3
3	KM376QC-1004200	Oil Ring Parts	3
4	KM376QC-1004004	Piston Pin	3
5	KM376A-1004005	Piston	3
6	KM376QC-1004100	Connecting Rod Bush	3
7	KM376QC-1004006	Connecting Rod Bearing	6
8	KM376QC-1004007	Piston Pin Retainer Ring	6
9	KM376QC-1004102	Connecting Rod Body	3
10	KM376QC-1004103	Connecting Rod Cover	3
11	KM376QC-1004104	Connecting Nut M9	6
12	KM376QC-1004105	Connecting Rod Bolt	6

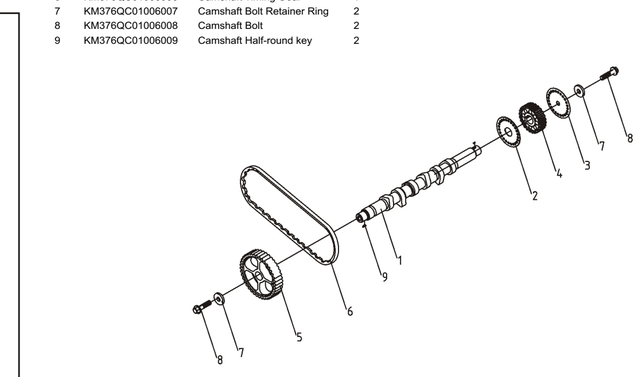

CAMSHAFT ASSEMBLY (KG376AG-1006000)

No.	Part. No	Description	Qty.
1	KM376QC01006001	Camshaft	1
2	KM376QC01006002	Fuel Injection pump Driving-wheel Reta	1
3	KM376QC01006003	Fuel Injection pump Driving-wheel Reta	1
4	KM376QC01006004	Fuel Injection Pump Driving-wheel	1
5	KM376QC01006005	Camshaft Timing Gear	1
6	KM376QC01006006	Camshaft Timing Gear	1
7	KM376QC01006007	Camshaft Bolt Retainer Ring	2
8	KM376QC01006008	Camshaft Bolt	2
9	KM376QC01006009	Camshaft Half-round key	2

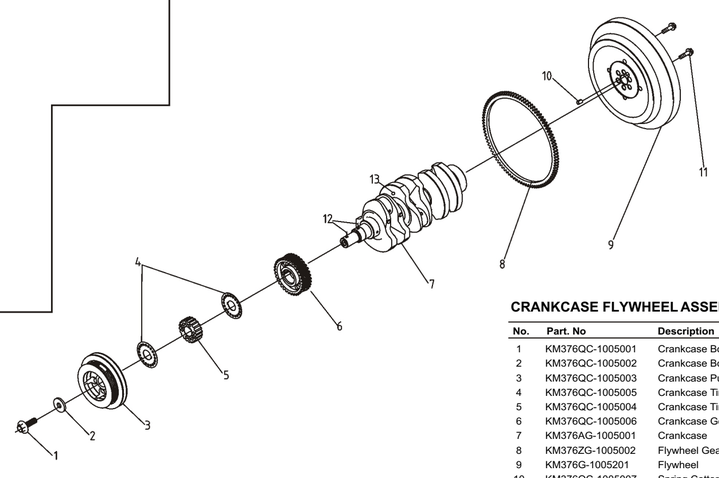

CRANKCASE FLYWHEEL ASSEMBLY (KM376A-1005000)

No.	Part. No	Description	Qty.
1	KM376QC-1005001	Crankcase Bolt	1
2	KM376QC-1005002	Crankcase Bolt Gasket	1
3	KM376QC-1005003	Crankcase Pulley Assembly	1
4	KM376QC-1005005	Crankcase Timing Pulley Retainer Ring	1
5	KM376QC-1005004	Crankcase Timing Pulley	1
6	KM376QC-1005006	Crankcase Gear	1
7	KM376AG-1005001	Crankcase	2
8	KM376ZG-1005002	Flywheel Gear Ring	1
9	KM376G-1005201	Flywheel	2
10	KM376QC-1005007	Spring Cotter Pin	1
11	KM376QC-1005008	Flywheel Bolt	1
12	GB1099-79	Key 5×6.5×16	1
13	GB308-89	Ball 1/4in	1

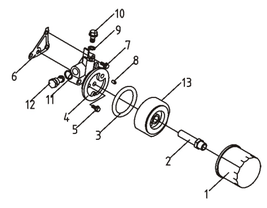

OIL FILTER ASSEMBLY (KM376AG-1012000)

No.	Part. No	Description	Qty.
1	KM376QC-1012100	Oil Filter Element Assembly	1
2	KM376QC-1012001	Oil Filter Connecting Pipe	1
3	GB3452.1-1992	O-ring 71.4×3.55	1
4	KM376QC-1012002	Oil Filter Base	1
5	GB9074.15-1988	Bolt Assembly M8×60	1
6	KM376QC-1012003	0il Filter Gasket	1
7	GB9074.15-1988	Bolt Assembly M8×30	2
8	GB/T119-1986	Straight Pin 5×12	1
9	KM376QC-1012004	Plain Gasket	2
10	KM376AG-1012005	Plug Gasket	1
11	KM376QC-1012006	Safety Valve Gasket	1
12	KM376QC-1012300	Safety Valve Gasket	1
13	KM376QC-1012301	Oil-cooling Base	1